DE	GERMANY

Diagram / Parts List

DML145

RECHARGEABLE FLASHLIGHT

2021/01

(DE) DML145 / RECHARGEABLE FLASHLIGHT

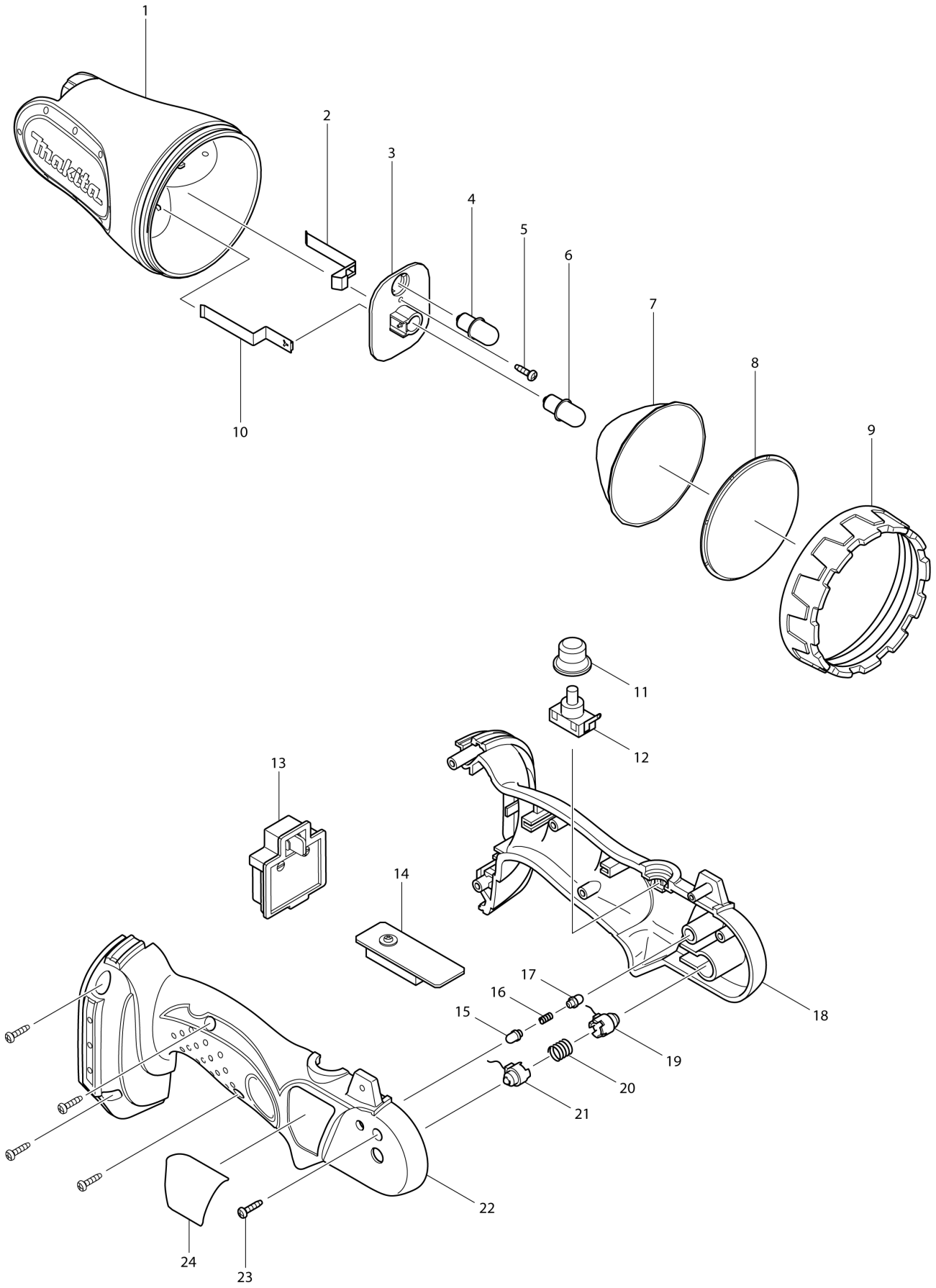

DE	GERMANY

DML145 / RECHARGEABLE FLASHLIGHT

Item	Sub	Parts No.	Parts Description	Qty	I/C	E/C No.	Close No.	Remark
001		GM00001003	CASE HEAD 30105185104	1				
002		GM00001010	BULB CONTACT PLATE-21201185002	1				
003		GM00001002	PROTECTOR(CONTACT)32009120012	1				
004		A-90233	BULB SET	1				
005		GM00001012	SCREW 3X12 PB BLACK ZN	1				
006		A-90233	BULB SET	1				
007		GM00000130	REFLECTOR	1				
008		GM00000070	LENS	1				
009		GM00001001	REFLECTOR RETAINER 30110185003	1				
010		GM00001009	BULB CONTACT PLATE (+)	1				
011		GM00001006	RUBBER COVER 39010185004	1				
012		651709-3	SWITCH DPC-1111-02	1				
013		GM00001007	BATTERY HOLDER 32010185005	1			82365	
013-1		643828-9	TERMINAL	1	S	82365		
014		GM00001011	CIRCUIT BOARD G0314500101	1			Y04701	
014-1		GM00001011	CIRCUIT BOARD G0314500101	1	O	Y04701		
015		GM00001005	KNOCK SHAFT 31011120009	1				
016		GM00000090	COMPRESSION SPRING 4	1				
017		GM00001005	KNOCK SHAFT 31011120009	1				
018		GM00001014	HOUSING SET	1			82365	
	D10		INC. 22				82365	
018-1		GM00001118	HOUSING SET	1	S	82365		
	D10		INC. 22			82365		
019		632524-4	PIVOT TERMINAL UNIT R	1				
020		233144-3	COMPRESSION SPRING 7	1				
021		632523-6	PIVOT TERMINAL UNIT L	1				
022		GM00001014	HOUSING SET	1			82365	
	D10		INC. 18				82365	
022-1		GM00001118	HOUSING SET	1	S	82365		
	D10		INC. 18			82365		
023		GM00001013	SCREW 3X14 PB BLACK ZN	6				
024		GM00001050	NAME PLATE D0114600200	1		Y04755	Y07130	
024-1		GM00001452	NAME PLATE D0111460050	1	X	Y07130		
025		GM00001119	LEAD ASSY	1		82365		
026		GM00001185	LEAD ASSY	1		82365		

Interchange
O : Yes
X : No
< : the new part can be substituted for the current.
> : the current part can be substituted for the new.
S : Interchangeable as a set.