DE	GERMANY

Diagram / Parts List

DML801

LED FLASHLIGHT

2021/01

(DE) DML801 / LED FLASHLIGHT

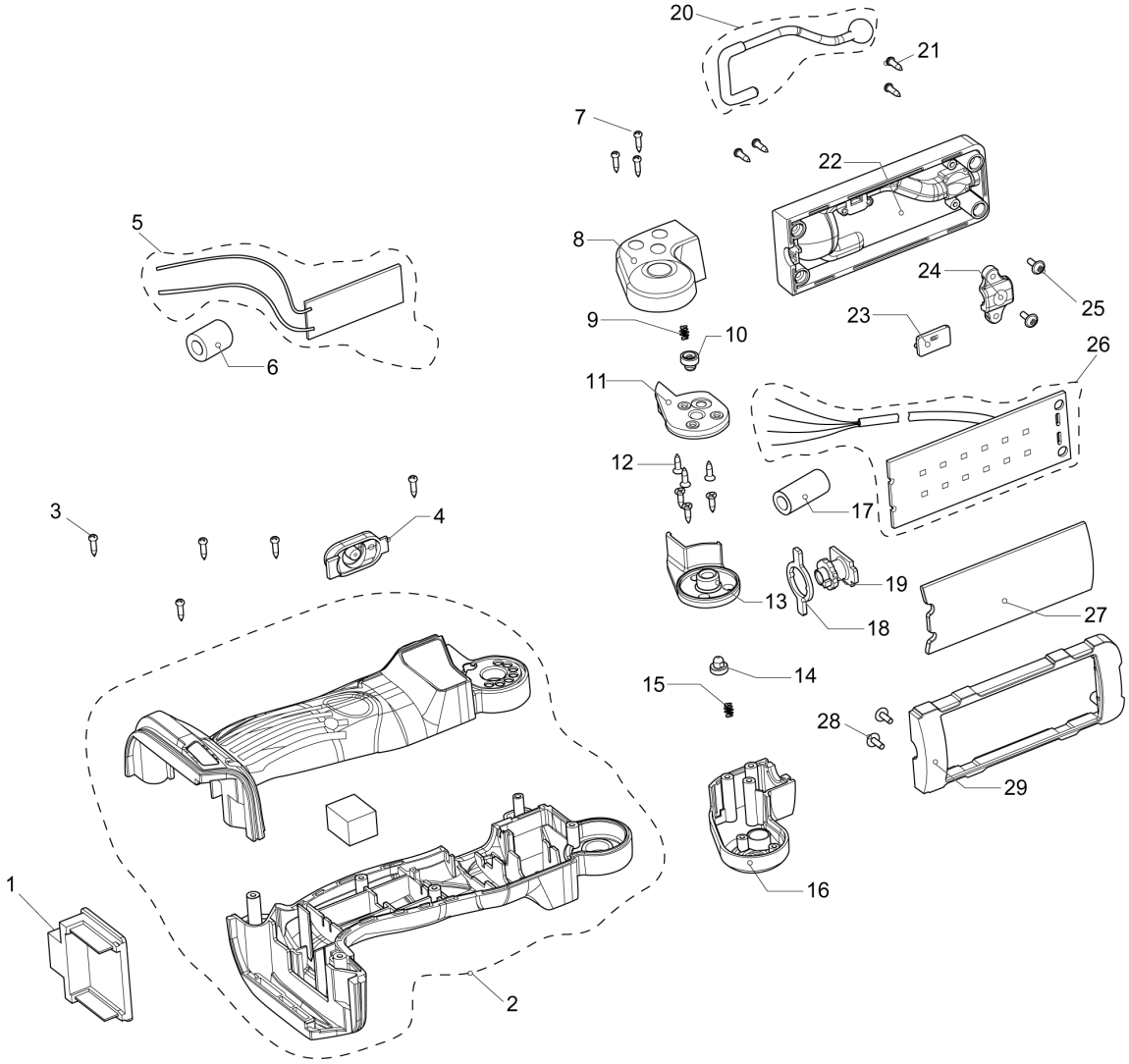

DE	GERMANY

DML801 / LED FLASHLIGHT

Item	Sub	Parts No.	Parts Description	Qty	I/C	E/C No.	Close No.	Remark
001		GM00001117	BATTERY HOLDER C2010239007	1				
002		GM00001287	HOUSING R/L(G0180100105)	1				
003A		GM00001269	SCREW 3X12PB(B0130120202)	1			Y06139	
003-1A		GM00001269	SCREW 3X12PB(B0130120202)	5	<	Y06139		
003-1B		GM00001269	SCREW 3X12PB(B0130120202)	5				
004		GM00001285	SWITCH HOLDER ASSY(G0180100103	1				
005		GM00001286	MAIN CIRCUIT ASSY(G0180100104)	1				
006		GM00001266	MAGNET RING(B)(A2301005900)	1				
007		GM00001269	SCREW 3X12PB(B0130120202)	3				
008		GM00001273	LEFT ROTATOR (C0120801005)	1				
009		GM00001270	SPRING (B1214801020)	1				
010		GM00001279	SPRING LID (C1020801001)	1				
011		GM00001271	ROTATOR BRACKET L(C0120801003)	1				
012		GM00001268	SCREW 2.6X10KA(B0126100121)	6				
013		GM00001272	ROTATOR BRACKET R(C0120801004)	1				
014		GM00001279	SPRING LID (C1020801001)	1				
015		GM00001270	SPRING (B1214801020)	1				
016		GM00001274	RIGHT ROTATOR (C0120801006)	1				
017		GM00001265	MAGNET RING(A)(A2301005800)	1				
018		GM00001282	FIX PLATE (C3020801001)	1				
019		GM00001280	TURNING SHAFT (C1020801002)	1				
020		GM00001283	HOOK ASSY (G0180100101)	1				
021		GM00001269	SCREW 3X12PB(B0130120202)	4				
022		GM00001276	REAR CASE HEAD (C0120801008)	1				
023		GM00001278	HOOK LATCH COVER(C0120801010)	1				
024		GM00001277	HOOK HOLDER (C0120801009)	1				
025		GM00001267	SCREW 2.6X8PWB(B0126080006)	2				
026		GM00001284	LED CIRCUIT ASSY(G0180100102)	1				
027		GM00001281	LENS (C1020801003)	1				
028		GM00001267	SCREW 2.6X8PWB(B0126080006)	2				
029		GM00001275	FRONT CASE HEAD(C0120801007)	1				
A01A		GM00001288	SHOULDER HOOK SET G0180100100	1		Y06072		
A01B		GM00001288	SHOULDER HOOK SET G0180100100	1				

A:
B:

Interchange
O : Yes
X : No
< : the new part can be substituted for the current.
> : the current part can be substituted for the new.
S : Interchangeable as a set.