Model No.TD110D CORDLESS IMPACT DRIVER

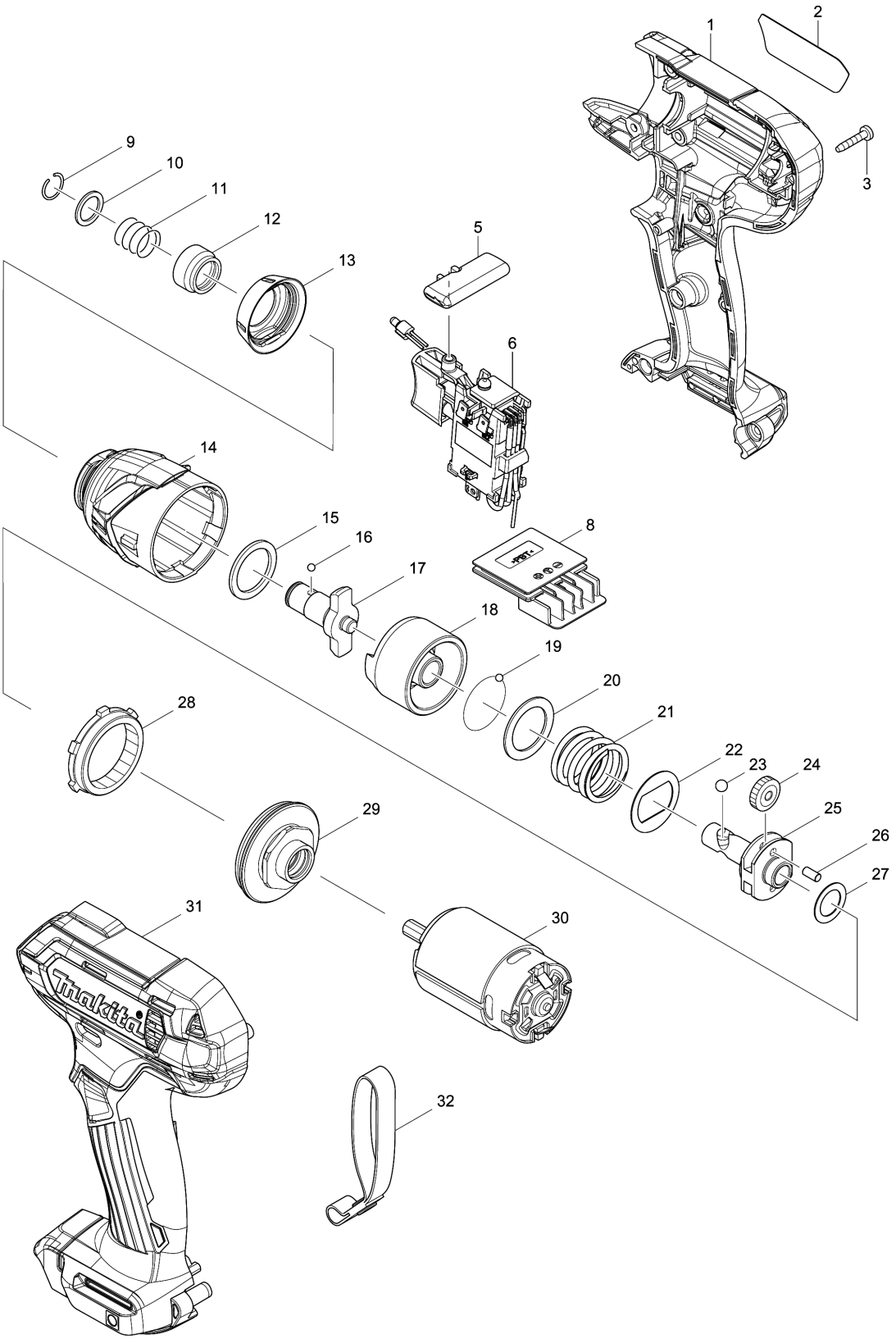

Model No.TD110D CORDLESS IMPACT DRIVER

Položka	Objednávacie číslo	Popis	Zmena	ks	New/Old	Možnosť 1	Možnosť 2	Poznámka
001	183B49-8	HOUSING SET		1				
C10	252126-6	HEX. LOCK NUT M4-7		2				
D10		INC. 31						
002	851G86-7	TD110D NAME PLATE		1	*			
002-1	851G85-9	TD110D NAME PLATE	<	1				
003	266429-2	TAPPING SCREW 3X16		8				
005	456039-5	F/R CHANGE LEVER		1				
006	632F42-8	SWITCH UNIT		1	*			
C10	620463-0	LED CIRCUIT		1	*			
C20	632F64-8	LINE FILTER UNIT		1	*			
006-1	632J76-5	SWITCH UNIT	<	1				
C10	620625-0	LED CIRCUIT		1				
C20	632F64-8	LINE FILTER UNIT		1	*			
C21	688161-2	LINE FILTER	<	1				
008	644813-5	TERMINAL		1				
009	231965-7	RING SPRING 10		1				
010	267143-3	FLAT WASHER 11		1				
011	233005-7	COMPRESSION SPRING 13		1				
012	324711-6	BIT SLEEVE		1				
013	424737-9	BUMPER		1				
014	143277-5	HAMMER CASE COMPLETE		1				
015	261140-1	NYLON WASHER 20		1				
016	216019-1	STEEL BALL 3		2				
017	324895-0	ANVIL M		1				
018	324894-2	HAMMER		1				
019	216019-1	STEEL BALL 3		24				
020	267380-9	FLAT WASHER 20		1				
021	234064-4	COMPRESSION SPRING 21		1				
022	267813-4	WASHER 21		1				
023	216002-8	STEEL BALL 4.8		2				
024	227213-0	SPUR GEAR 17		2				
025	324897-6	SPINDLE		1				
026	268217-3	PIN 3.5		2				
027	253052-2	FLAT WASHER 12		1				
028	227215-6	INTERNAL GEAR 43		1				
029	158671-8	BEARING BOX COMPLETE		1				
030	629163-9	DC MOTOR		1				
031	183B49-8	HOUSING SET		1				
C10	252126-6	HEX. LOCK NUT M4-7		2				
D10		INC. 1						
033	688164-6	LINE FILTER		1	*			
033-1	632F64-8	LINE FILTER UNIT	<	1				
C10	688164-6	LINE FILTER		1				
A01	266622-8	+ TRUSS HEAD SCREW M4X12		1				
A02	346909-5	HOOK		1				

Please order the parts with part number. Print Date 11/10/2021

Model No.TD110D CORDLESS IMPACT DRIVER

Položka	Objednávacie číslo	Popis	Zmena	ks	New/Old	Možnosť 1	Možnosť 2	Poznámka
A03	784244-7	+ BIT 2-50		1				
A04B	456128-6	BATTERY COVER		1				
A05B	***DC10SA	DC10SA BATTERY CHARGER		1	*			
D10		COMPO-PARTS			*			
A05-1B	***DC10SB	DC10SB BATTERY CHARGER	<	1				
D10		COMPO-PARTS						
A06B	197394-3	BATTERY BL1020B SET		2	*			
A06-1B	197396-9	BATTERY BL1021B SET	<	2	*			
A06-2B	197396-9	BATTERY BL1021B SET	O	2				
A07B	821661-1	PLASTIC CARRYING CASE		1				
C10	417724-5	LATCH		2				

Please order the parts with part number. Print Date 11/10/2021